COLLECTION: LODGE BAR, BAR BACK, BARSTOOLS

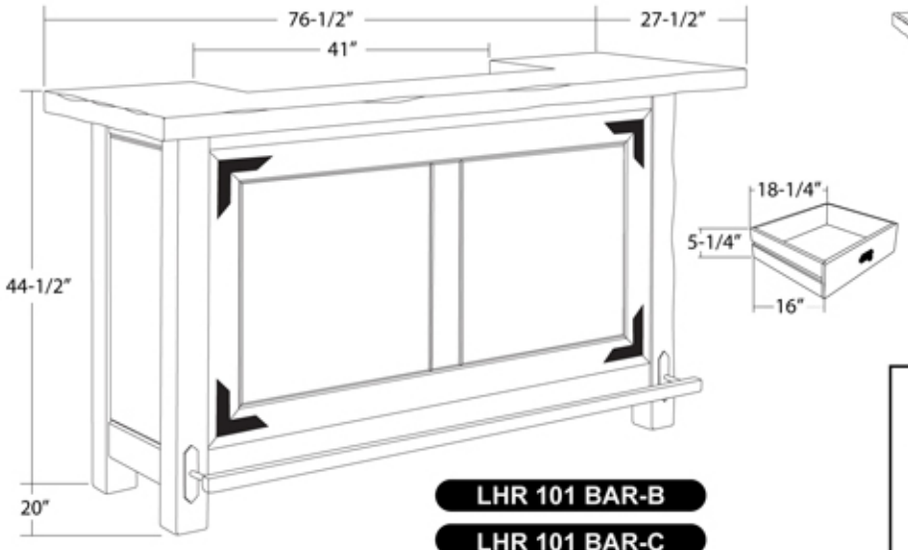

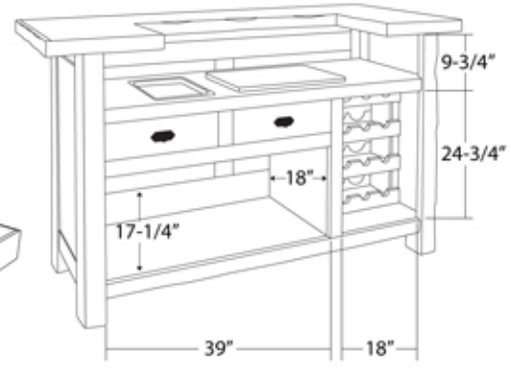

LHR 101 BAR-B

LHR 101 BAR-C

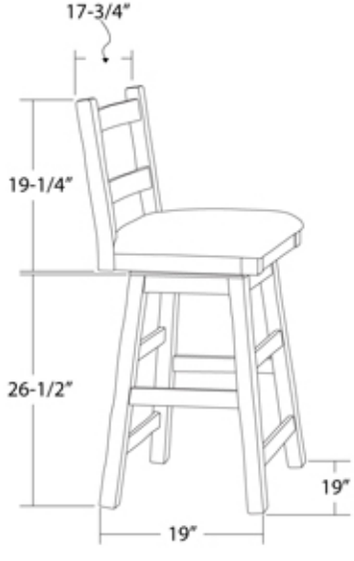

LHR 101 BS30-S 30"

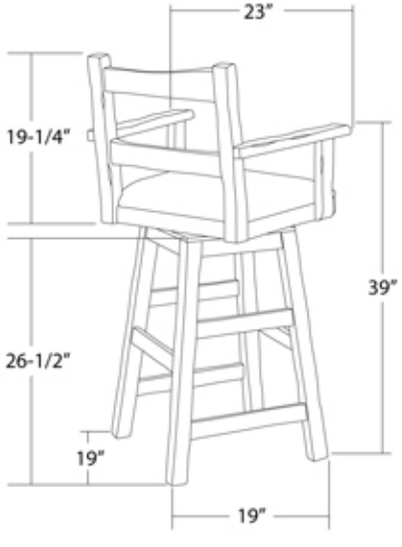

LHR 101 BS30-SA 30"

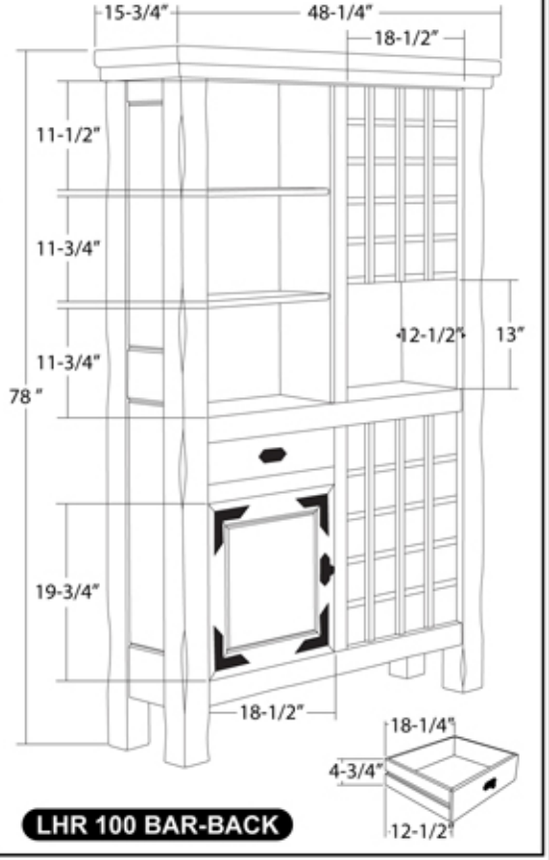

LHR 100 BAR-BACK

Number sequence makes refrence of Features with Benefits

FEATURES

1. Lodge Bar, Bar Back and Barstools are made of solid hardwood construction of Cottonwood and Alder.
2. Multi-step lacquer finish.
3. Lodge Bar features granite cutting board, sink and wine storage.
4. Sturdy solid iron footrest in bar.
5. Bar Back holds 40 bottles of your favorite wine, has utensil drawer and collectibles display area.
6. Barstools are available in both 24" and 30" sizes and feature durable nylon fabric.
7. Bar holds up to 16 bottles.

BENEFITS

1. A Lodge retreat in your home. The Lodge Bar should satisfy you and your guests for many years of enjoyment.
2. Wood tone lacquer coating gives depth, color and clarity.
3. Extra value.
4. Makes sturdy and durable quality cases.
5. Ensures a smooth glide and easy operation
6. Multifunction with generous storage.

b

ARTISAN HOME FURNITURE

by *International Furniture Direct, LLC*

THE Lodge COLLECTION®